PROPRIETARY AND CONFIDENTIAL

THE INFORMATION CONTAINED IN THIS DRAWING IS THE SOLE PROPERTY OF HARRISON HYDRA-GEN LTD. ANY REPRODUCTION IN PART OR AS A WHOLE WITHOUT THE WRITTEN PERMISSION OF HARRISON HYDRA-GEN LTD. IS PROHIBITED.

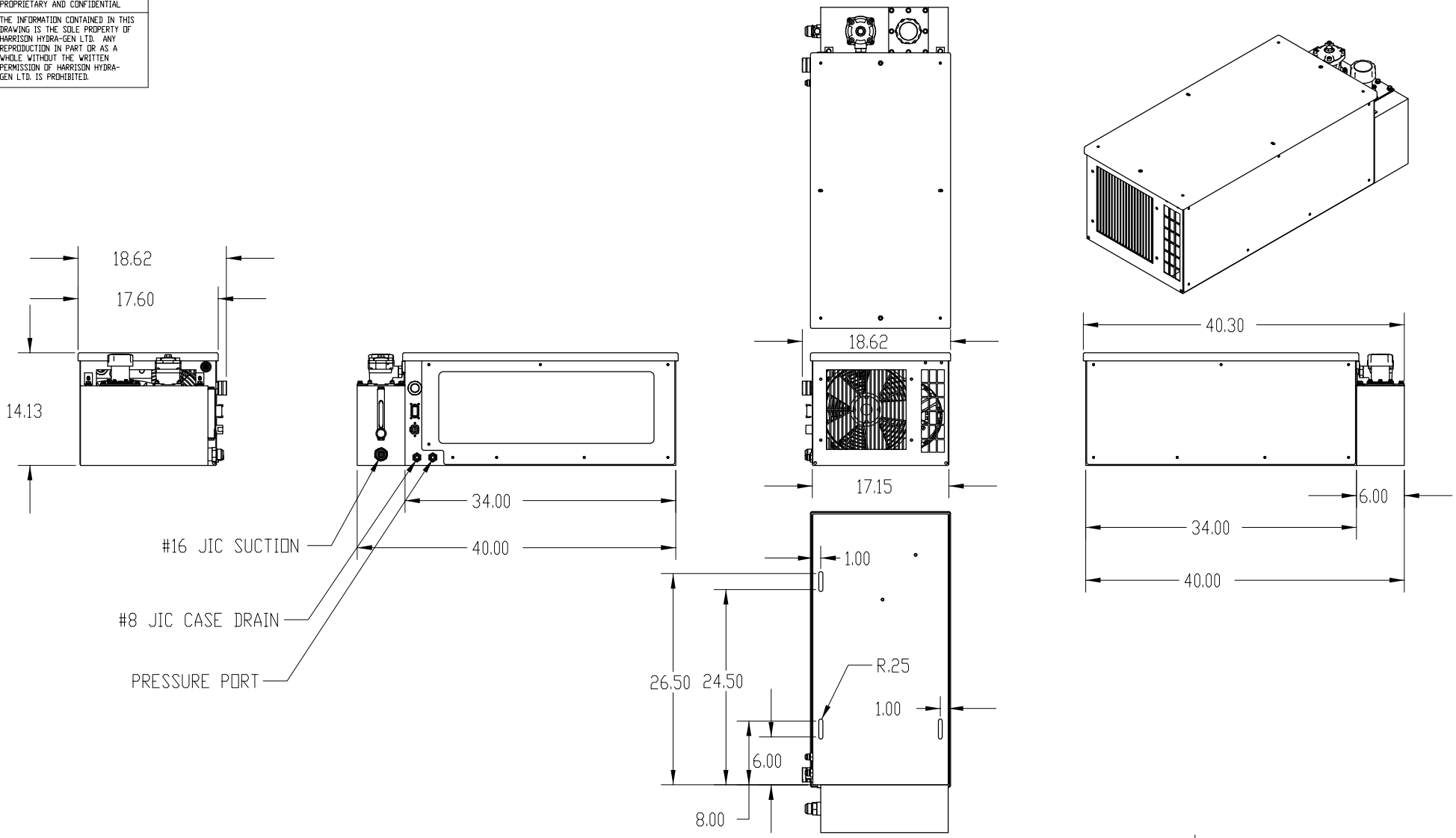

NOTES:

REV.	DRFT	CHK	APVD	DATE	DESIGN CHANGES
A	PD	PD	PD	5-1-07	NEW DRAWING

UNLESS OTHERWISE SPECIFIED:

DIMENSIONS ARE IN INCHES
TOLERANCES:
FRACTIONAL ± 0.015
ANGULAR: MACH ± 0.5° BEND ±1°
TWO PLACE DECIMAL ± 0.01
THREE PLACE DECIMAL ± 0.003

DO NOT SCALE DRAWING

Harrison HYDRAULIC GENERATORS
10827 Tower Oaks Blvd.
Houston, TX 77070
Tel: (281) 807-4420
Fax: (281) 807-4815

SCALE: 1:12 | SHEET 1 OF 1

HARRISON HYDRA-GEN LTD.

TITLE: 6.0,8.0,10.0 KW LPG DIMENSIONS

PART: 6.0,8.0,10.0 KW LPG

SIZE B | DWG. NO. HU 6-10 KW LPG -01-A | REV A